Hydrotek

Sensor Faucets and Flush Valves

6000C Series

AC or Battery Powered Sensor Operated Faucet

The 6000C Series faucet is a piston operated, deck mounted sensor faucet that provides a vandal resistant, no touch solution that promotes better hygiene and energy savings.

Using Hydrotek's patented gooseneck design, the 6000C Series faucet is ideal in clinics, hospitals, and manufacturing facilities for scrub stations.

- **ADA Compliant**. Meets all barrier free codes
- Conserves water and energy
- Easily installed in new or retrofit applications
- Competitively priced for today's commercial market
- Promotes cleanliness & hygiene
- Proven Hydrotek craftsmanship and reliability

Features

- ***ACCU-SENSE*** adjustable sensor eyes.
- Chrome plated, solid brass construction.
- Wall mountable, waterproof control box with armored, vandal resistant control and power cables.
- Preset/adjustable sensor range of 6" - 30" for various installation requirements.
- Standard automatic time-out feature. Disabled, but adjustable to 20, 30, or 60 seconds. Prevents accidental sink overflow.
- Shut-off delay is adjustable from 0.5 (preset) to 8 seconds.
- Standard single-hole deck mount. Adapts to optional 4" to 8" cover plates.
- Includes in-line filter with clean-out trap to reduce maintenance costs.
- Standard 6" gooseneck spout and 1.5 GPM Laminar flow control.
- All parts are field-replaceable to ensure quick and easy repair.
- Adjustable to AC or battery powered (additional part required).
- AC with DC backup models automatically switch to batteries during a power outage.
- Slow closing, piston-operated solenoid valve provides reliable and smooth operation without water hammer.
- Superior VSI silicone elastomer piston seals are unaffected by chlorine, chloramines, or ammonia.
- Control module allows a unique self-check of all electrical components.
- No-touch system enhances hygiene in medical, institutional, food service industries, etc.

Compliances & Certifications

- ADA Compliant
- ASME A112.18.1
- NSF/ANSI Standard 372 - Lead Free Compliant
- USGBC Member

Available Models

- ☐ **H-6000C-LR**: Lead Free, AC Powered
- ☐ **HB-6000C-LR**: Lead Free, Battery Powered
- ☐ **H-6000C-LRDC:** Lead Free, AC Powered with DC Backup

Special Finishes

- Additional Finishes Upon Request

The information contained within this document subject to change without notice

5055 Forsyth Commerce Rd Ste 124, Orlando, FL 32807
Phone: 800.922.9883 | Fax: 866.670.5580 | hydrotekintl.com

Revised 6/1/23

Hydrotek

Sensor Faucets and Flush Valves

6000C Series

AC or Battery Powered Sensor Operated Faucet

Deck Mounted

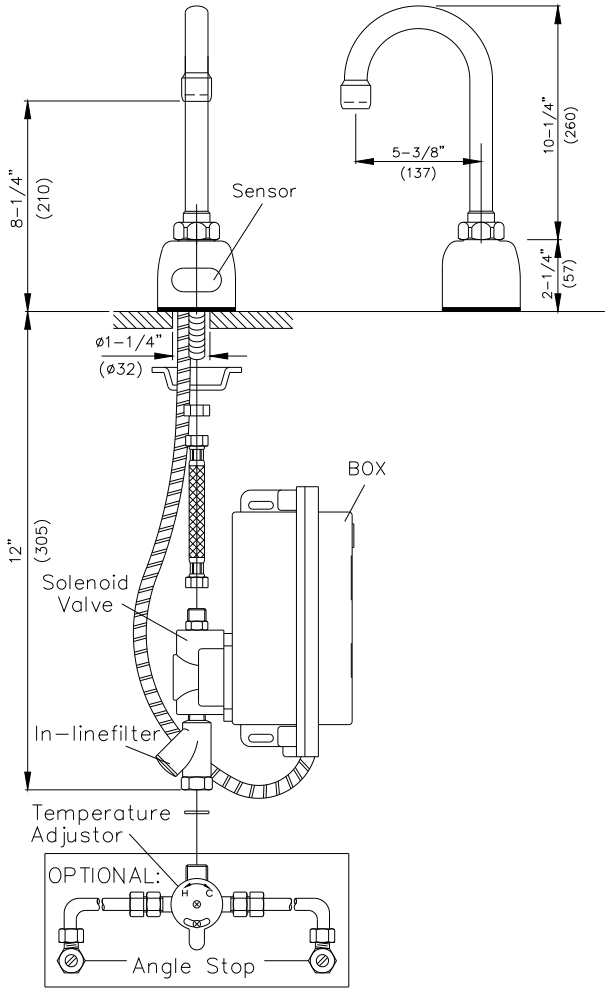

Specifications:

Faucet Construction: ..... Solid brass, chrome plated
Control Circuit: ..... Solid state, AC or battery, switchable
Auto. Time-out: ..... Disabled and adjustable to 20, 30, or 60 seconds
Line Purge (request only): ..... 2 minute run every 12 hours or 24 hours
Scrub Mode Delay (request only): ..... 60, 120, 180 seconds
Sensor Range: ..... Preset and adjustable
Shut-off Delay: ..... Preset and adjustable from 0.5-8 seconds
Control Cable: ..... Armored, vandal resistant
Solenoid Valve: ..... 6V DC, normally closed
Wattage: ..... 0.4W (idle), 5W (in use)
Operating Pressure: ..... 5 psi to 125 psi
Flow Control: ..... 1.5 GPM, Laminar Flow Control

AC Mode

Power Adapter
Standard Plug-in: ..... Input AC 100-240V, 60 Hz, 0.4A
(UL/CSA) Output DC 15V, 0.8A/Class 2
Power Cable: ..... Armored, vandal resistant
Optional Multi-Unit: ..... Serves up to 8 faucets
(UL/CSA) Input AC 100-240V, Output DC 15V, 3.34A

Battery Mode

Battery Powered Models: ..... (4) AA Alkaline Batteries
Battery Service Life: ..... 400,000 on/off cycles, up to 4 years

Package Includes:

(1) Faucet with electronic sensor
(1) Control box with control module and 6V DC solenoid
(1) 12V DC plug-in power adaptor (H-6000C and H-6000C-DC only)
(1) In-line filter with clean-out trap
(1) Flexible S.S. supply tube, 3/8”
(1) 6” Gooseneck Spout
(1) Mounting hardware
(1) 1.5 GPM flow control
(4) AA Alkaline batteries (HB-6000C and HB-6000C-DC only)
(1) Battery holder (HB-6000C and HB-6000C-DC only)

Dimensions:

Base Width (Outside Measurement) ..... 2-1/4”
Base Depth ..... 2-1/4”
Faucet Height (Aerator to Base) ..... 8-1/4”
Faucet Height Overall ..... 12-1/2”
Depth (Center of Aerator to Center of Faucet Base) ..... 5-3/8”
Mounting Bolt Length ..... 2-1/4”
Mounting Type ..... Single-hole mount

Optional Variations and Accessories

- 0.35, 0.5, 1.5, 2.2 GPM Laminar Flow
- 4” or 8” Centerset Cover Plate
- HC-010 Multi-Unit Voltage Adapter (AC Powered Only) - 8 units
- HC-001 Mixing/Check Valve (Mechanical)
- HBL-03-LR Thermostatic Mixing Valve with Checks (Lead Free)
- 8” deep Gooseneck and 6” or 8” Swing Spout
- Watersense Labeled Flow Control by Neoperl available

The information contained within this document subject to change without notice

5055 Forsyth Commerce Rd Ste 124, Orlando, FL 32807
Phone: 800.922.9883 | Fax: 866.670.5580 | hydrotekintl.com

Revised 6/1/23