Hydrotek

Sensor Faucets and Flush Valves

4000C Series

U.S. Patent 6192530B1, 4741363

AC or Battery Powered Sensor Operated Faucet

The 4000C Series faucet is a single-hole deck mounted, piston operated sensor faucet that provides a vandal resistant, no touch lavatory solution with hot/cold mixing and manual on/off that promotes better hygiene and energy savings.

- **ADA Compliant**. Meets all barrier free codes
- Conserves water and energy
- Easily installed in new or retrofit applications
- Competitively priced for today's commercial market
- Promotes cleanliness & hygiene
- Proven Hydrotek craftsmanship and reliability

Available in:

AC Powered Models

- ✔ Lead Free, AC Powered (H-4000C-LR)
- ✔ Lead Free, AC Powered Scrub Sink (H-4000C-SD-LR)
- ✔ Lead Free, AC Powered with DC Backup (H-4000C-LRDC)
- ✔ Lead Free, AC Powered with DC Backup Scrub Sink (H-4000C-SD-LRDC)

Battery Powered Models

- ✔ Lead Free, Battery Powered (HB-4000C-LR)
- ✔ Lead Free, Battery Powered Scrub Sink Version (HB-4000C-SD-LR)

Compliances & Certifications

ADA Compliant · NSF Certified to NSF/ANSI 372 · U.S. Green Building Council Member

- ADA Compliant
- ASME A112.18.1/CSA B125.1
- NSF/ANSI Standard 372 - Lead Free Certified
- USGBC Member

Features:

- ***ACCU-SENSE*** adjustable sensor eyes.
- Chrome plated, solid brass construction.
- Wall mountable, waterproof control box with armored, vandal resistant control and power cables.
- Preset/adjustable sensor range of 6" - 30" for various installation requirements.
- Standard automatic time-out feature. Disabled, but adjustable to 20, 30, or 60 seconds. Prevents accidental sink overflow.
- Shut-off delay is adjustable from 0.5 (preset) to 8 seconds.
- Solid brass body with single hole deck mounting. Optional 4" or 8" cover plate for 3 point anchoring.
- Includes in-line filter with clean-out trap to reduce maintenance costs.
- All parts are field-replaceable to ensure quick and easy repair.
- Adjustable to AC or battery powered (additional part required).
- AC with DC backup models automatically switch to batteries during a power outage.
- Manual override provides continuous water flow for special applications or in case of failure.
- Manual controlled temperature adjustment.
- Slow closing, piston-operated solenoid valve provides reliable and smooth operation without water hammer.
- Superior VSI silicone elastomer piston seals are unaffected by chlorine, chloramines, or ammonia.
- Standard 1.5 GPM Laminar flow control.
- Control module allows a unique self-check of all electrical components.

Revised 09/05/25

Hydrotek

Sensor Faucets and Flush Valves

4000C Series

U.S. Patent 6192530B1, 4741363

AC or Battery Powered Sensor Operated Faucet

H-4000C (AC Powered)

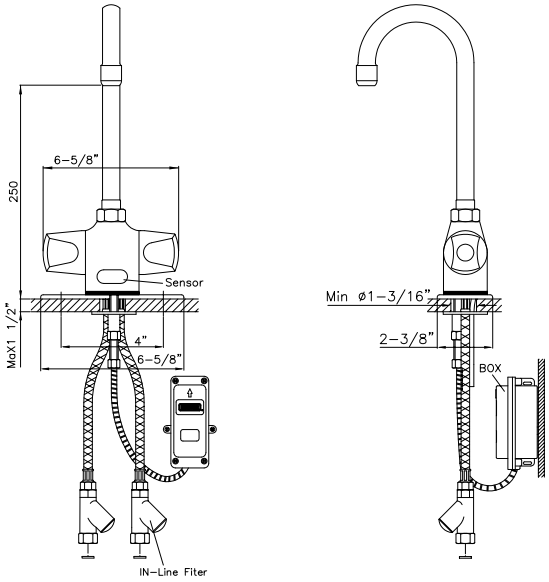

HB-4000C (Battery Powered)

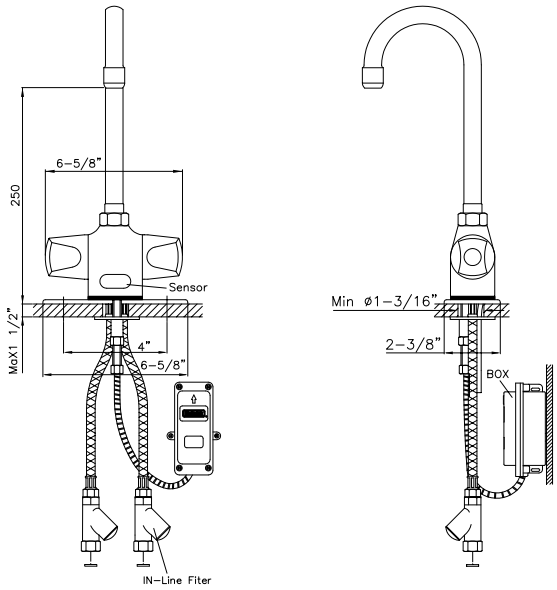

HYDROTEK INTERNATIONAL, INC.
5055 Forsyth Commerce Rd., Ste 124
Orlando, FL 32807
800.922.9883 (Phone)
866.670.5580 (Fax)
www.hydrotekintl.com

Operation:

1. A continuous, invisible beam is emitted from the sensor.
2. The faucet is activated by placing hands under the spout within the effective range of the beam. Water starts to flow immediately for as long as the user's hands remain in the sensor range.
3. When hands are removed, the water flow stops. The sensor will automatically reset and be ready for the next user.
4. In the battery powered version, a flashing red light will indicate a low battery condition.
5. Use the faucet handle for temperature adjustment and manual on/off.

Specifications:

Faucet Construction: ..... Solid brass, chrome plated
Control Circuit: ..... Solid state, AC or battery, switchable
Auto. Time-out: ..... Disabled and adjustable to 20, 30, or 60 seconds
Line Purge (request only): ..... 2 minute run every 12 hours or 24 hours
Scrub Mode Delay (request only): ..... 60, 120, 180 seconds
Sensor Range: ..... Preset and adjustable
Shut-off Delay: ..... Preset and adjustable from 0.5-8 seconds
Control Cable: ..... Armored, vandal resistant
Solenoid Valve: ..... 6V DC, normally closed
Wattage: ..... 0.4W (idle), 5W (in use)
Operating Pressure: ..... 5 psi to 125 psi
Flow Control: ..... 1.5 GPM, Laminar Flow Control
1.5 or 2.0 GPM Rose Spray for Scrub Sink

AC Mode

Power Adapter
Standard Plug-in: ..... Input AC 100-240V 60 Hz
(UL/CSA) Output DC 15V, 0.8A/Class 2
Power Cable: ..... Armored, vandal resistant
Optional Multi-Unit: ..... Serves up to 8 faucets
(UL/CSA) Input AC 100-240V, Output DC 15V, 3.34A

Battery Mode

Battery Powered Models: ..... (4) AA Alkaline Batteries
Battery Service Life: ..... 400,000 on/off cycles, up to 4 years

Package Includes:

(1) Faucet with electronic sensor
(1) Control box with control module
(1) 12V DC plug-in power adaptor (H-4000C and H-4000C-DC only)
(1) In-line filter with clean-out trap
(1) Flexible supply tube
(1) 6" Gooseneck Spout
(1) Mounting hardware
(1) 1.5 GPM flow control
(4) AA Alkaline batteries (HB-4000C and HB-4000C-DC only)
(1) Battery holder (HB-4000C and HB-4000C-DC only)

Dimensions:

Base Width (Outside Measurement) ..... 2-1/2"
Base Depth ..... 2"
Faucet Height (Aerator to Base) ..... 5-1/4"
Faucet Height Overall ..... 6-3/8"
Depth (Center of Aerator to Center of Faucet Base) ..... 5-1/8"
Mounting Bolt Length ..... 2-1/2"
Mounting Type ..... Single-hole mount

Optional Variations and Accessories

- 1.5 GPM Soft-Flow Aerator; 0.35, 0.5, 2.2 GPM Laminar Flow
- 4" or 8" Centerset Cover Plate
- HC-010 Multi-Unit Voltage Adapter (AC Powered Only) - 8 units
- HBL-04 Thermostatic Mixing Valve with Checks
- Watersense Labeled Flow Control by Neoperl available

Revised 09/05/25